McAllister Technical Services

Manufacturers of surface analytical instruments and devices

West 280 Prairie Avenue Coeur d'Alene, Idaho 83815
Telephone: (208) 772-9527 Fax: (208) 772-3384
E-mail: solutions@mcallister.com

E-Beam Evaporator Instructions

THANK YOU for your purchase of MTS' E-Beam Evaporator system. It is the finest of its kind available. We appreciate the confidence you have placed in our company. We encourage your comments and suggestions on this product and its manual. Please read this manual carefully prior to assembling/mounting your evaporator. We have found this will answer many of the commonly asked questions, saving time and aiding understanding. It will be time well spent.

Leak Check Certificate

Model EB-_____ Date _____ Job # _____ Checked by _____

This is to certify that the above-referenced product has been checked on a Helium Mass Spectrometer leak detector having a sensitivity of _____ X 10^{-}— std. cc/sec and has been found to have no measurable leak.

Warning! High Voltages!!

This product employs potentially lethal voltages. All service work or diagnostics must be performed **only** be authorized and qualified personnel.

The E-Beam Evaporator should always be used

- with the cable set explicitly specified for this product.
- with all cables connected
- with the evaporator attached to a grounded vacuum system
- with the water supply connected and operating
- in and indoor laboratory environment
- by qualified personnel

Failure to follow safety precautions or failure employ caution or common sense may result in injury or death. Only qualified personnel should operate this product.

Check for Damage:

Many shipping companies require that claims for damage and/or loss be filed within a very short period of time, sometimes within one week of delivery! Promptly inspect the shipment for exterior as well as hidden damage. If ***any*** damage or loss is encountered, be sure to do **ALL** of the following:

- Notify the shipper promptly. If the damage is significant, insist on an on-site inspection.
- Retain ALL packing materials.
- Do not proceed with installation or unpacking.
- Notify MTS of the damage.
- Do not allow the shipping company to remove the goods from your premises without first notifying MTS.

Unpacking Instructions:

Take the unit out of the box on a clean, dry, level surface. Clean any debris, dust or stray packaging material before unwrapping. Check for any loose screws. Inspect for hidden damage from shipment. Verify the shipment received against the enclosed packing list and against your order. Notify MTS promptly of any discrepancies. We recommend you save the packing box and materials for equipment storage or possible future shipment.

General Precautions:

Under normal conditions your Evaporator will provide years of trouble-free service, especially if the following simple maintenance is performed. After bakeout, it may be necessary to relubricate the lead screw of the crucible manipulator. Use the silicone grease in the supplied syringe. When replacing the screws in portions that will be baked, be sure to re-coat the threads with an anti-seize compound. Do not allow contamination to get into the evaporator interior.

Use the appropriate bolts, nuts, washers and gasket to mount the evaporator to your chamber.

tric) Sizes

Nominal Flange

When tightening the flange bolts, make sure the bolt heads and threads are in good condition, the threads are lubricated with anti-seize material and that the wrench fits properly. Turn the bolts deliberately and with great care. A stripped, seized or broken bolt can be frustrating. A slipped wrench can injure the evaporator or your hands. Install the E-Beam Evaporator on your chamber/flange as you would any other ConFlat type flange. Use standard, 0.080" thick, flat copper gaskets. The use of **lubricated bolts *with washers*** is recommended. Finger tighten all bolts evenly, then sequentially torque the bolts in even steps

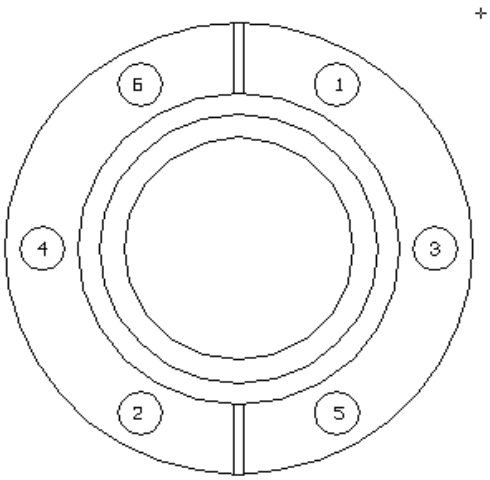

General Information:

The E-Beam Evaporator can be used to evaporate metals and other materials from a crucible or rod, in vacuum. Heating is accomplished by electron bombardment, imparting energy to the evaporant or crucible.

For ultimate cleanliness, and where material properties of the evaporant allow, a rod or bar may be mounted in place of the crucible.

To replace the filament:

In the event the filament needs to be replaced, follow this procedure. The parenthetical numbers refer to the assembly cross section on the last page of this manual.

- Loosen set screws and disconnect ceramic bead coated filament power wires from the filament connector blocks (5).
- Loosen barrel connector screw securing flux monitor signal wire (22).
- Rotate shutter 180° from fully closed position.
- Remove four 2-56 SHCS (10, 27) holding feedback body assy (6) to copper EBeam body (1).

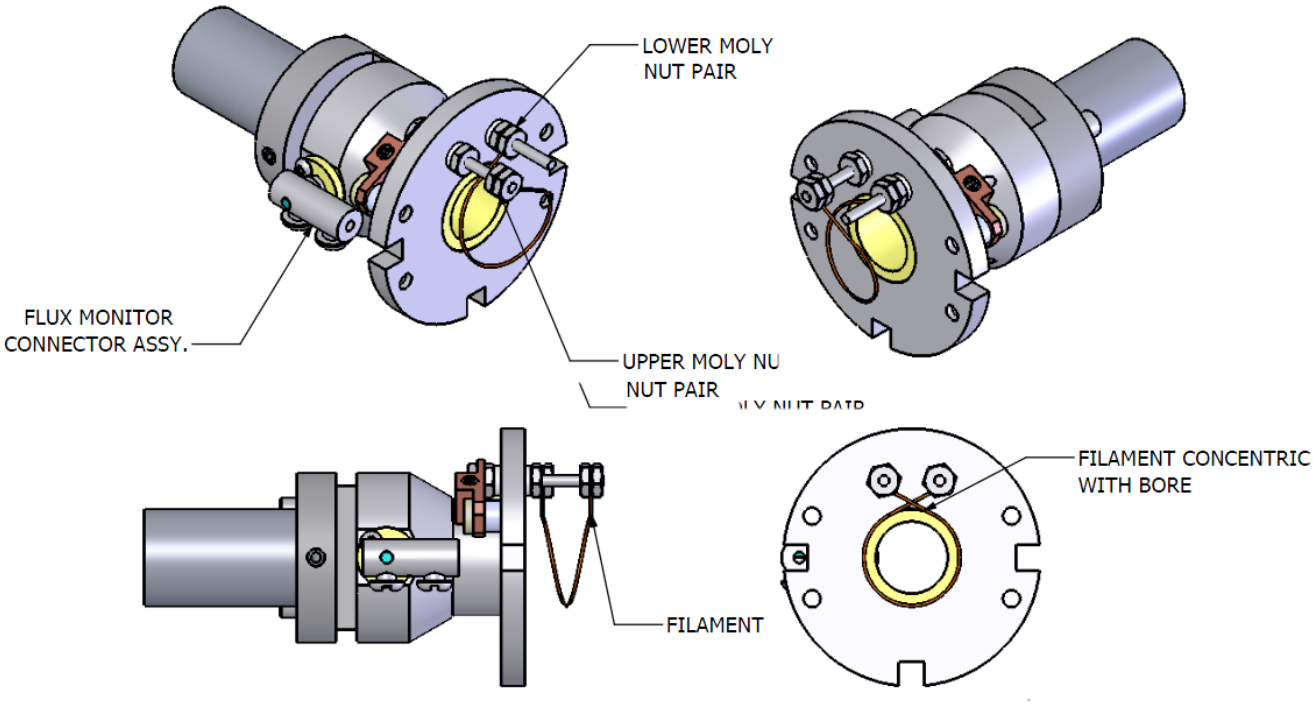

- Remove feedback body assembly and mount securely (in a vise) with the filament up and the filament connection 0-80 Moly nuts (9) easily accessible. Caution do not damage the flux monitor connector assembly.
- Loosen the top nut on each filament post (8) and remove the filament.
- Insert the filament forming tool into the ceramic guide (20).
-
- Form a .06" diameter loop in the end of a ~2.25" piece of .010" Tungsten wire.

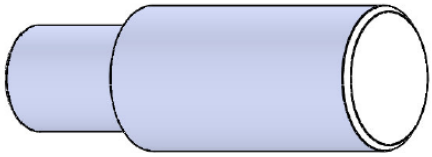

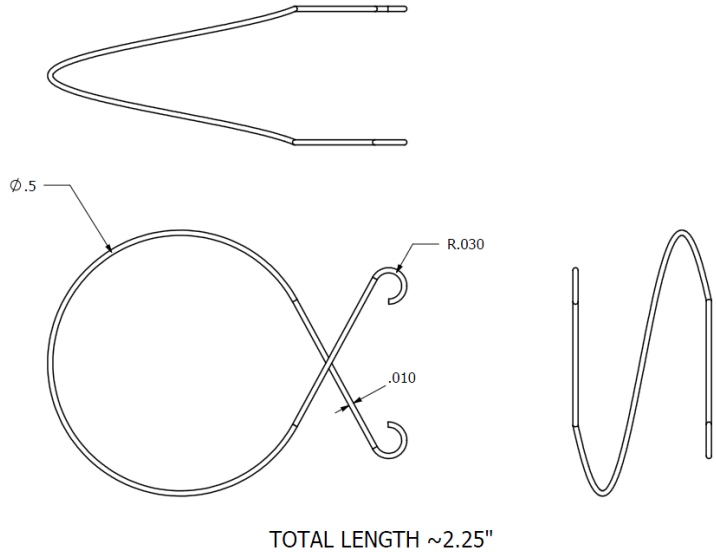

- Place the loop around the filament post between the lower 0-80 Moly nut pair. Tighten the top nut while holding the lower nut of the pair to keep it from rotating.
- Wrap one turn of the Tungsten wire around the forming tool rising to meet the upper pair of Moly nuts on the other filament post.
- Form a loop around the filament post between the upper 0-80 Moly nut pair. Tighten the top nut while holding the lower nut of the pair to keep it from rotating. Cut off any extra wire.
- Remove the filament forming tool and gently adjust the filament wire position until it is concentric with the bore of the feed back body.
- Reattach feedback body assembly.
- Look down the bore and verify that no part of the filament is intruding into the bore.
- Reconnect flux monitor signal wire.
- Reconnect filament power wires.

The integrated Flux Monitor uses an ion collector mounted in the exit beam column. For a given material and at a given emission current (I_{em}) and e-beam energy, the flux of ions is measured. **This ion flux is directly proportional to the flux of evaporated atoms.**

There is an integral shutter in the exit column, which can be opened or closed using a small, magnetically-coupled rotary drive. A water-cooled OFHC shroud surrounds the evaporation chamber. The refractory metal front of the evaporator is removable to allow the filament to be easily replaced.

The evaporant holder (for either a solid rod or crucible) is mounted on a linear drive, which allows fine positioning of the holder for optimal flux. It also allows the solid rod to be advanced as it is consumed by evaporation.

When tightening or loosening the flange bolts on the linear drive, be sure to use the supplied wrench to support the drive. This way the tightening torque is not applied to the actuator mechanism, which could cause damage.

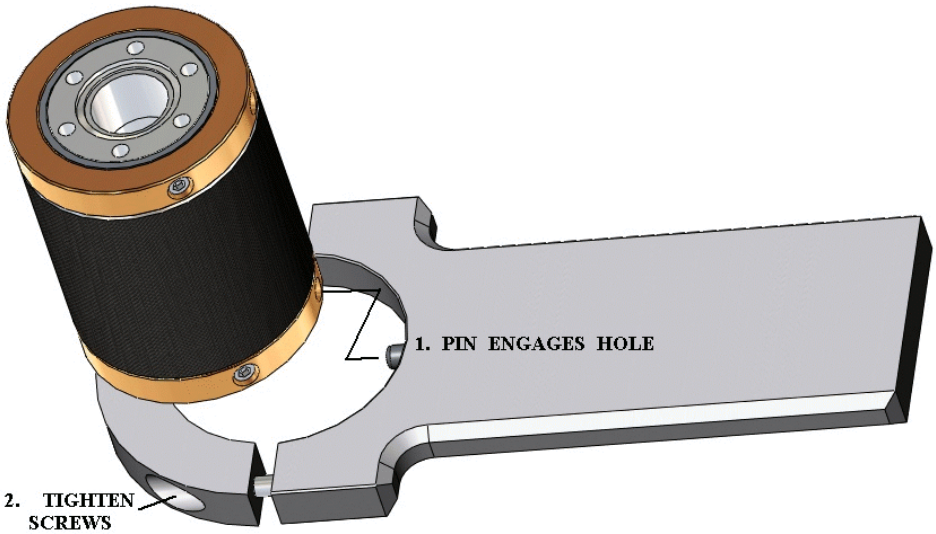

Controls:

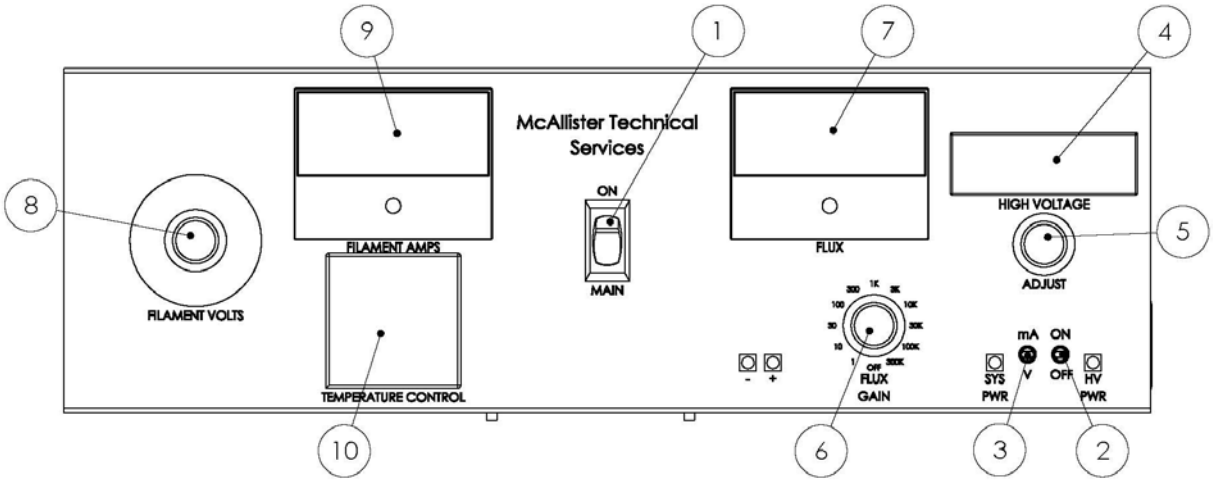

(1) The MAIN POWER switch supplies power to the entire electronics box.
(2) The HV ON/OFF switch supplies power to the high voltage supply only if the MAIN POWER switch is ON and the cover HV interlock is satisfied.
(3) The mA/V selector switch causes the
(4) HIGH VOLTAGE LCD meter to display the HV BIAS acceleration voltage or emission current.
(5) The ADJUST knob sets the HV BIAS acceleration voltage.
(6) The FLUX GAIN switch varies the amplification of the flux signal until it reaches a measurable range and is displayed on the
(7) FLUX meter.
(8) The FILAMENT VOLTAGE knob adjusts the voltage applied to the filament.
(9) The FILAMENT AMPS meter displays current supplied to the filament.
(10) The programmable TEMPERATURE CONTROL displays the evaporation chamber body temperature. Monitoring temperature during E-Beam Evaporation is not required but is useful as an indication of sufficient water cooling. However, the controller set point must be above the measured temperature for the filament electronics to function.
The programmable function of the temperature controller is used during Degas.
See the Watlow manual for specific information about programming.

Getting Started:

Mounting the evaporator:

The evaporator should be mounted so the exit aperture is higher than the mounting flange to prevent melted source material from escaping the crucible due to gravity. Depending on supplied flange to tip length, about 300-500 mm of clearance behind the evaporator is required to facilitate removal of the evaporant holder.

Accessing the evaporant:

The evaporant may be replenished, changed, or removed without dismounting the entire evaporator by removing the SHV feedthrough flange and attached evaporant holder from the linear drive at the rear of the evaporator. Once removed, the crucible can be changed or refilled, or a rod source can be installed. Be sure to use the supplied wrench to support the linear drive during tightening and loosening of the SHV feedthrough flange screws.

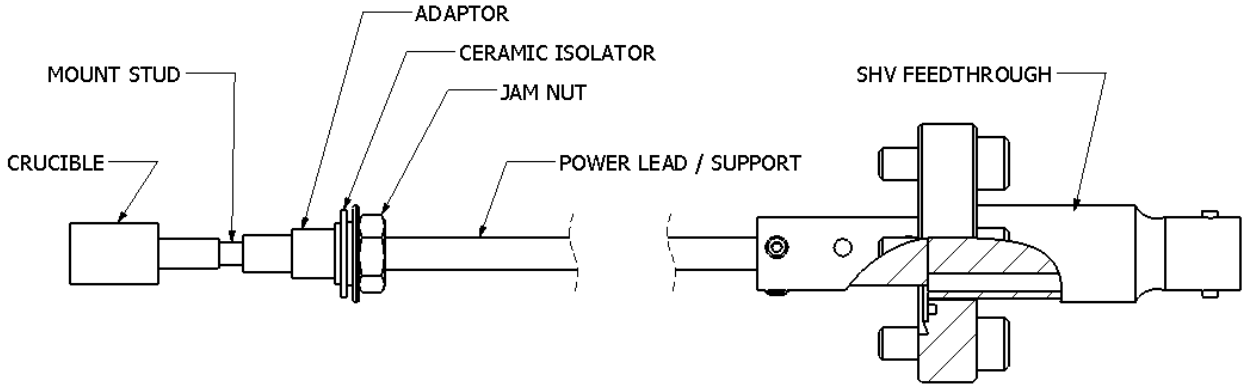

The 99.8% Al_2O_3 ceramic linings inside the evaporator chamber and OFHC shroud help prevent shorting when coated with conductive material. A ceramic optical baffle mounted on the holder support rod also prevents evaporated material from exiting the back of the evaporator. These ceramics may be easily removed if they need cleaning after prolonged use.

When re-inserting the evaporant, be sure the linear translator is initially fully retracted (farthest away from the evaporator flange). This prevents the source material from accidentally damaging the filament during insertion. Tighten the SHV feedthrough lightly. Connect an ohmmeter between the SHV feedthrough center conductor and either copper filament feedthrough pin. Verify that there is no short between the source and filament before fully tightening the SHV feedthrough flange. Monitor the ohmmeter for shorting to the filament while moving the linear translator to the fully inserted position. Return the linear translator to the fully retracted position. The exact position will be determined later, using the Flux Monitor and Emission Current readings.

Water Lines:

The water supply line should be connected to the 1/8”co-axial stainless steel tubing on the evaporator and the return line should be connected to the ¼”side fitting on the tee. Secure the water lines so they are not accidentally disconnected during operation. Remove water lines and blow the water out during bakeout or degas.

Electrical Checks:

The two copper pins on the 4 pin feedthrough on the evaporator are for filament power. Resistance between the pins should be <1 Ω and resistance between either of these pins and ground should be >1 MΩ. The other two pins are thermocouple (Type K). Resistance between the two thermocouple pins should be <1 Ω and resistance between either of these pins and ground should be <1 Ω.

Bakeout:

Remove cables and water lines. Blow residual water out of the evaporator. Bakeout in normal fashion, but NEVER exceed 100^0C with the black shutter actuator knob attached during bakeout. Higher temperatures can damage the installed magnets. If the shutter knob is removed you may bakeout up to 200^0C. To remove the knob, simply grasp with your fingers and pull it straight off it's post. Monitor the temperature during bakeout. Never move the linear translator during bakeout or when it is above ambient temperature.

Degas:

Degassing the evaporation chamber, crucible and/or evaporant is recommended after initial installation, after bakeout and especially after replacing the evaporant.

Chamber:

- Disconnect the water lines and blow out the water shroud.
- Open the shutter.
- Turn the HV switch to OFF.
- Adjust the set point of the programmable temperature controller to 300°C.
- Increase the filament voltage slowly until the Filament Amps meter displays ~5A.
- The temperature of the OFHC shroud around the evaporation chamber will be displayed.
- Do not exceed 300°C.

Be careful - there is **no filament over-current protection** and the filament supply is capable of providing current levels that can damage the filament. **For maximum filament longevity, filament current levels should always be kept to the minimum necessary to achieve the desired heating results.** It may take several hours for the OHFC shroud to reach the desired temperature. Never exceed 300°C. Maintain temperature until vacuum begins to improve.

Empty Crucible:

- Turn HV Adjust fully counter-clockwise.
- Switch HV power on, adjust to 100V.
- Select mA to monitor emission current on the LCD meter.
- Move the crucible with the linear translator to a position resulting in maximum indicated emission current (approximately centered within the filament).
- Adjust filament voltage as necessary to obtain ~5 mA emission current.

Evaporant:

- Fully retract the linear translator (farthest away from the evaporator flange).
- Pressure inside the vacuum chamber should be <1 X 10^{-6} Torr.
- Connect the water lines and initiate flow.
- Open the shutter.
- Switch HV power on, adjust to ~800V.
- Select mA to monitor emission current on the LCD meter.
- Move the crucible with the linear translator to a position resulting in maximum indicated emission current (approximately centered within the filament).
- Adjust filament voltage as necessary to obtain ~50 mA emission current.

The gas desorbing from the source and shroud walls will be indicated by the flux monitor. Desorbing gas will cause the flux monitor to vary over time whereas true evaporation will produce a stable flux reading. The first time, it may take several hours to stabilize, depending on the cleanliness and purity of the evaporant.

Evaporation:

After sufficient degassing, and with the LCD display set to Emission current and the Flux Monitor set to ~100X, slowly increase the filament current until evaporation begins. The crucible mass may take a while to heat so be patient, especially with a new evaporant material. Watch the vacuum ion gauge readings and adjust the Filament Current and/or High Voltage in small increments as necessary to optimize heating, always waiting until the Flux Monitor readings stabilize. Very small changes in filament current can produce large changes in emission current.

DO NOT EXCEED 125 mA EMISSION CURRENT

Once the Flux Monitor readings have stabilized, the crucible position can be adjusted to optimize the flux rate.

For evaporating low temperature materials and organics, HV may be as small as 100-300V. For high temperature materials, a voltage of 900-1000V may be needed. Due to space charge effects, there will be a significant increase in heating power at the higher voltages.

All voltage and current levels given are strictly guidelines. Actual readings will depend upon actual operating conditions and materials.

The evaporator is shipped with a W filament in place but other materials may be used. Ta is much easier to bend and spot weld than W or Mo although it has a slightly higher work function and, therefore, produces a bit fewer electrons than W under similar conditions. We find the 0.010” (.25 mm) diameter filament begins emission above 5A with minimal acceleration voltage. Currents above 6A produce the maximum of 125mA emission at relatively low acceleration voltages. Remember, for maximum filament longevity, filament current levels should always be kept to the minimum necessary to achieve the desired heating results.

Crucible evaporation is more directional than rod evaporation, which diffuses in all directions. However, rod evaporation is potentially cleaner since only the evaporant material is being heated. During initial heating, most rods will be melted at the tip and a ball will form, held in place by surface tension. Repositioning the rod may be required as material is evaporated.

Accessories included:

- Hex wrench kit
- High temperature Silicone (clear) grease for liner actuator.

Parts and factory service:

Replacement parts and non-warranty factory service are available on a fast turnaround basis. Please consult the factory with your specific need.

Specifications:

- Mounting Flange: 2.75" (70mm) CF flange
- Evaporator
  Length: ~17" (~432 mm)
  Flange-to-tip: User-selectable at time of order 9.0" (228 mm) minimum
  Weight: 5 lbs (2.3 Kg)
- Electronics
  Size: 19" Rack Mount X 5.2" (133 mm) X 12" (305 mm)

- Outputs
  Filament Supply: 0-24 VAC @ 9.38A
  High Voltage: 0-1000VDC @ 125mA
- Water flow: 0.25 gallons (0.5 l) per min
- Rod diameter: 0.02"-.187" (0.5 - 5 mm)
- Beam divergence: dependent on exit aperture

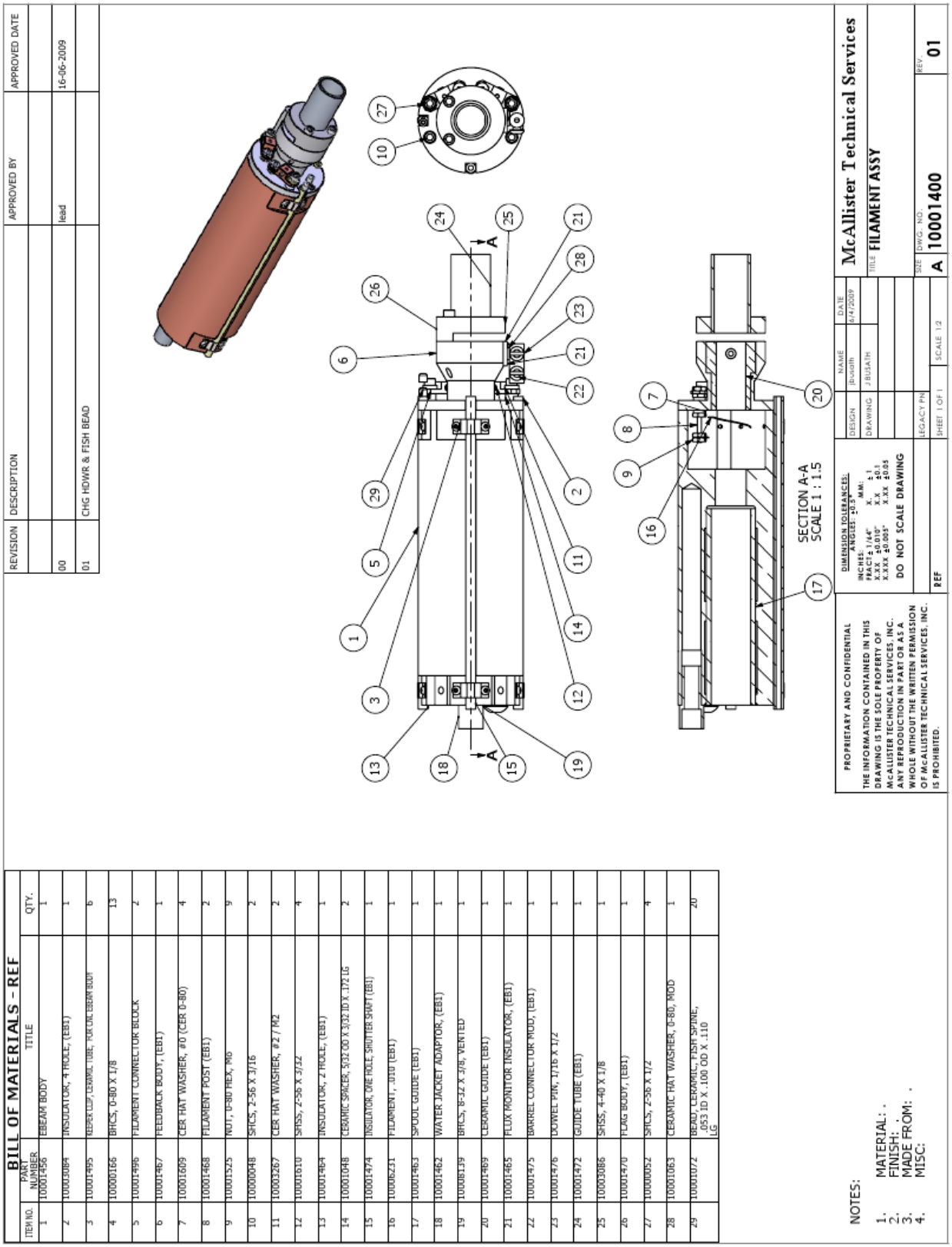

ITEM NO.	PART NUMBER	TITLE	QTY.
1	10001456	EBEAM BODY	1
2	10000084	INSULATOR, 4 HOLE, (EB1)	1
3	10001495	KEPEX LUP, CERAMIC TUBE, FOR DIE EBEAM BODY	6
4	10000166	BHCS, 0-80 X 1/8	13
5	10001496	FILAMENT CONNECTOR BLOCK	2
6	10001467	FEEDBACK BODY, (EB1)	1
7	10001609	CER HAT WASHER, #0 (CER 0-80)	4
8	10001468	FILAMENT POST (EB1)	2
9	10001525	NUT, 0-80 HEX, MOD	9
10	10000048	SHCS, 2-56 X 3/16	2
11	10001267	CER HAT WASHER, #2 / M2	2
12	10001610	SHSS, 2-56 X 3/32	4
13	10001464	INSULATOR, 2 HOLE, (EB1)	1
14	10001048	CERAMIC SPACER, 5/32 OD X 3/32 ID X .172 LG	2
15	10001474	INSULATOR, ONE HOLE, SHUTTER SHAFT (EB1)	1
16	10006231	FILAMENT, .010 (EB1)	1
17	10001463	SPOOL GUIDE (EB1)	1
18	10001462	WATER JACKET ADAPTOR, (EB1)	1
19	10008139	BHCS, 8-32 X 3/8, VENTED	1
20	10001469	CERAMIC GUIDE (EB1)	1
21	10001465	FLUX MONITOR INSULATOR, (EB1)	1
22	10001475	BARREL CONNECTOR MOD, (EB1)	1
23	10001476	DOWEL PIN, 1/16 X 1/2	1
24	10001472	GUIDE TUBE (EB1)	1
25	10003086	SHSS, 4-40 X 1/8	1
26	10001470	FLAG BODY, (EB1)	1
27	10000052	SHCS, 2-56 X 1/2	4
28	10001063	CERAMIC HAT WASHER, 0-80, MOD	1
29	10001072	BEAD, CERAMIC, FISH SPINE, .053 ID X .100 OD X .110 LG	20

NOTES:

1. MATERIAL: .
2. FINISH: .
3. MADE FROM: .
4. MISC:

-- END -